FREEWAY TURNSTILE

SWEEPER

The swinging waist-high turnstile Sweeper can operate in two modes: normally closed and normally open. Both access directions are free when the turnstile is deenergized. The turnstile is suitable for the most sites, where access control and restriction is required due to functionality, ease of use and stylish appearance. The primary purpose of the turnstile Sweeper is arrangement of access in one or two directions.

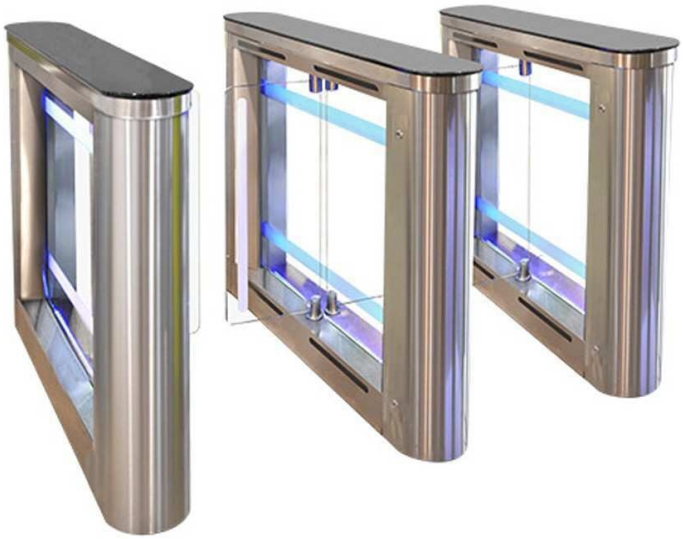

ELEGANT ACCESS SOLUTION WITH ENTRANCE ACCESSIBILITY SIGNAL LIGHTS

550/900 mm — PASSAGE WIDTH

30 pers/min — CROSSING CAPACITY

0,8 sec — OPENING/CLOSING

IP 41 — PROTECTIVE LEVEL

PASSAGE FOR DISABLED

ANTI-TAILGATING

BI-DIRECTIONAL

ADVANTAGES

- Sweeper equipped with sensors that allows to detect tailgating
- Ultra quite direct drive unit
- Successful combination of affordable price and high quality
- Customized surface finish and top lid
- Steadfast housing suitable for high traffic areas
- Solution for disabled and trolley access
- Can be integrated with any type of access control systems
- Low power consumption
- Low noise system operation
- Can be mounted on a mobile platform (CartPoland Frame-M)

STANDARD

- Wired remote control panel

OPTIONS

- Any access control systems upon request (e.g. passes counter, RFID device, coin acceptor push button, fingerprint, bar-code and QR-code reader etc.)
- Radio controller
- Heating function for external installation
- Automatic opening when power goes off

* *other passage width available optionally up on request*

CartPoland
Wólka Mińska ul. Olszowa 5 ,05-300 Mińsk Mazowiecki
office@cartpoland.pl | www.cartpoland.pl
www.bramkiobrotowe.eu | www.bramkiobrotowe.com

TECHNICAL SPECIFICATIONS	
Width, mm	950/1300
Length, mm	1310
Height, mm	1000
Weight, kg (not more)	Single pass - 163 Two pass - 251
Mechanism	Motorized

CONTROLLED BY

access control system;

manual control

When power goes OFF both directions are free.

ELECTRICAL SPECIFICATIONS

- Voltage:
  - from the AC (100-240)V, 50/60Hz;
  - from a DC source 12 V;
- Maximum power consumption 155W per pass.

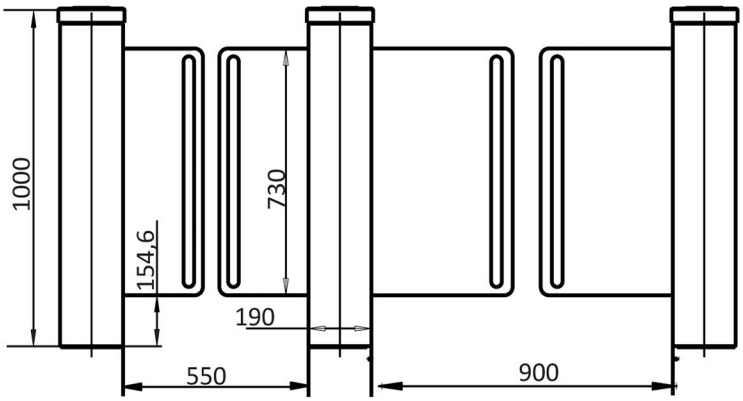

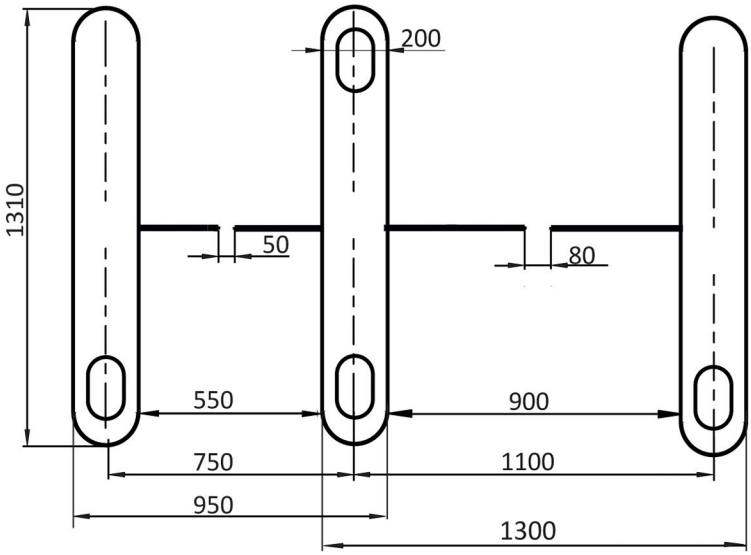

MATERIALS	
Standard housing	Brushed SS AISI 304
Available housing	Brushed SS AISI 316 Polished SS AISI 304 Polished SS AISI 316 Powder coated RAL
Top lid	Black glass

INSTALLATION AREAS

- Governmental Institutions
- Military Bases
- Nuclear Power Plants
- Production sites (Industrial Plants)
- Commercial areas
- Financial institutions
- Airport Premises
- Business (Office) Centers
- Hotels
- Sport Complexes
- Recreation areas
- Urban areas
- Education Institutions
- others

CartPoland®
Polski Producent Kart Plastikowych

CartPoland
Wólka Mińska ul. Olszowa 5 ,05-300 Mińsk Mazowiecki
office@cartpoland.pl | www.cartpoland.pl
www.bramkiobrotowe.eu | www.bramkiobrotowe.com

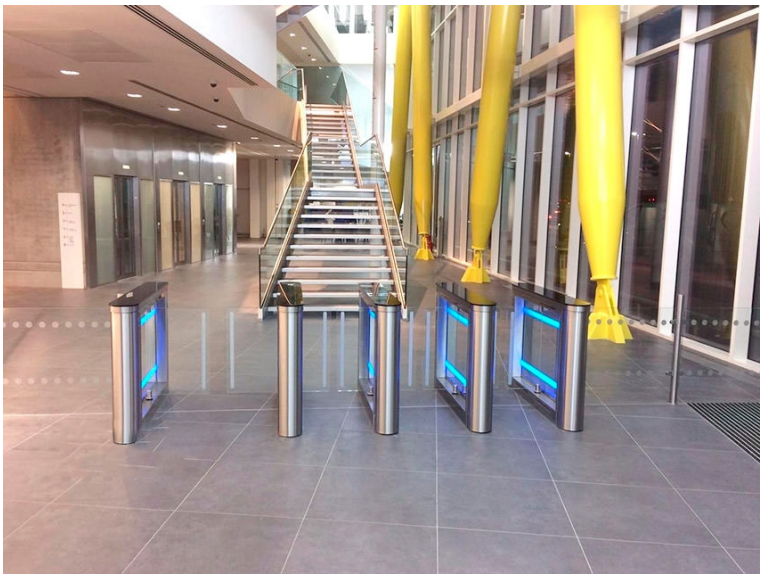

CartPoland
Wólka Mińska ul. Olszowa 5 ,05-300 Mińsk Mazowiecki
office@cartpoland.pl | www.cartpoland.pl
www.bramkiobrotowe.eu | www.bramkiobrotowe.com

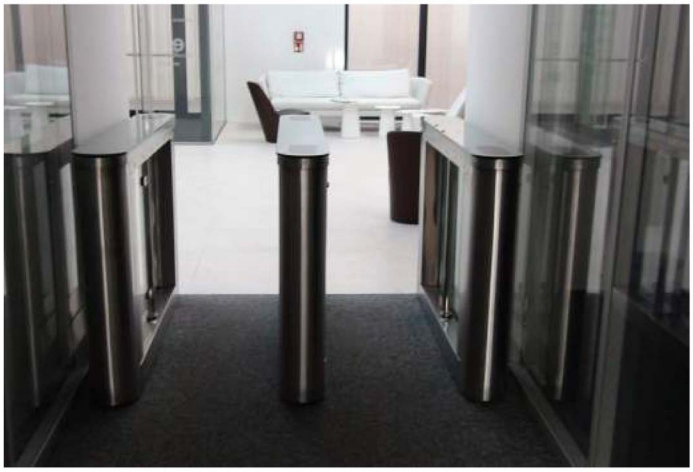

CartPoland
Wólka Mińska ul. Olszowa 5 ,05-300 Mińsk Mazowiecki
office@cartpoland.pl | www.cartpoland.pl
www.bramkiobrotowe.eu | www.bramkiobrotowe.com