CartPoland®
Polski Producent Kart Plastikowych

FREEWAY TURNSTILE
SWEEPER-HG

Sweeper-HG is a special version of Sweeper, with high glasses available up to 1800 mm from the floor. It helps to avoid transfer of anything above the turnstile, as well as over-jumping it. Special design allows to arrange even 900 mm passage which can be used for people with special needs. In the same time, both dimensions (height of wings and passage width) can be tailored according to customer's needs. Wings are made from safety tempered glass, but can be also made of polycarbonate or metal tube (to have vandal proof features).

PERFECT SOLUTION WITH HIGHER DEGREE OF SECURITY

550/900 mm — PASSAGE WIDTH
30 pers/min — CROSSING CAPACITY
0,8 sec — OPENING/CLOSING
IP 41 — PROTECTIVE LEVEL
PASSAGE FOR DISABLED
ANTI-TAILGATING
BI-DIRECTIONAL

ADVANTAGES

- Sweeper-HG equipped with sensors that allows to detect tailgating
- Ultra quite direct drive unit
- Successful combination of affordable price and high quality
- Customized surface finish and top lid
- Steadfast housing suitable for high traffic areas
- Solution for disabled and trolley access
- Can be integrated with any type of access control systems
- Low power consumption
- Low noise system operation
- Can be mounted on a mobile platform (CartPoland Frame-M)

OPTIONS

- Any access control systems upon request (e.g. passes counter, RFID device, coin acceptor push button, fingerprint, bar-code and QR-code reader etc.)
- Radio controller
- Heating function for external installation
- Automatic opening when power goes off

STANDARD

- Wired remote control panel

CartPoland®
Polski Producent Kart Plastikowych

CartPoland
Wólka Mińska ul. Olszowa 5 ,05-300 Mińsk Mazowiecki
office@cartpoland.pl | www.cartpoland.pl
www.bramkiobrotowe.eu | www.bramkiobrotowe.com

TECHNICAL SPECIFICATIONS	
Width, mm	Single pass (550) - 950 Two pass (550+550) - 1700
Length, mm	1383
Height, mm	1800
Weight, kg (not more)	Single pass - 220 Two pass - 270
Mechanism	Motorized

CONTROLLED BY:

access control system;

manual control

When power goes OFF both directions are free.

ELECTRICAL SPECIFICATIONS

- Voltage:
  - from the AC (100-240)V, 50/60Hz;
  - from a DC source 12 V;
- Maximum power consumption 155W per pass.

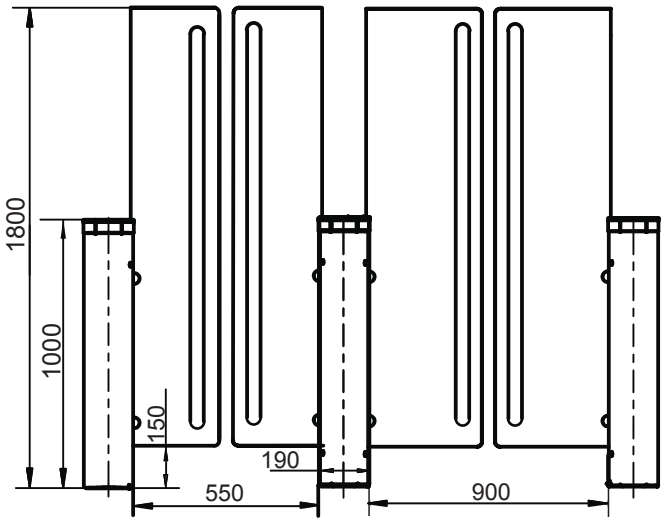

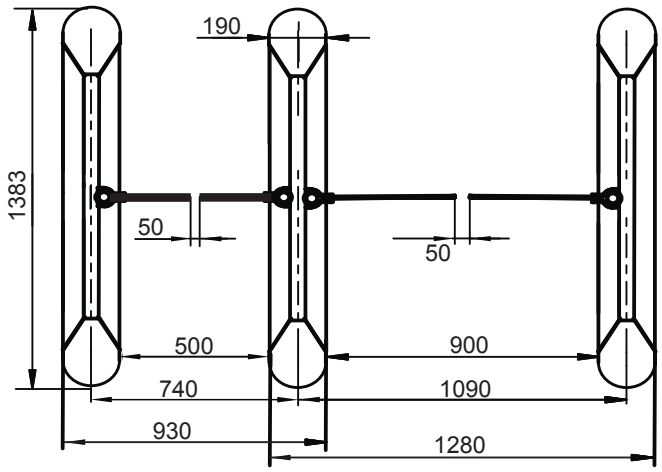

MATERIALS	
Standard housing	Brushed SS AISI 304
Available housing	Brushed SS AISI 316 Polished SS AISI 304 Polished SS AISI 316 Powder coated RAL
Top lid	Black glass

INSTALLATION AREAS

- Governmental Institutions
- Military Bases
- Nuclear Power Plants
- Production sites (Industrial Plants)
- Commercial areas
- Financial institutions
- Airport Premises
- Business (Office) Centers
- Hotels
- Sport Complexes
- Recreation areas
- Urban areas
- Education institutions
- others

**other materials and colors available optionally up on request*

CartPoland®
Polski Producent Kart Plastikowych

CartPoland
Wólka Mińska ul. Olszowa 5 ,05-300 Mińsk Mazowiecki
office@cartpoland.pl | www.cartpoland.pl
www.bramkiobrotowe.eu | www.bramkiobrotowe.com

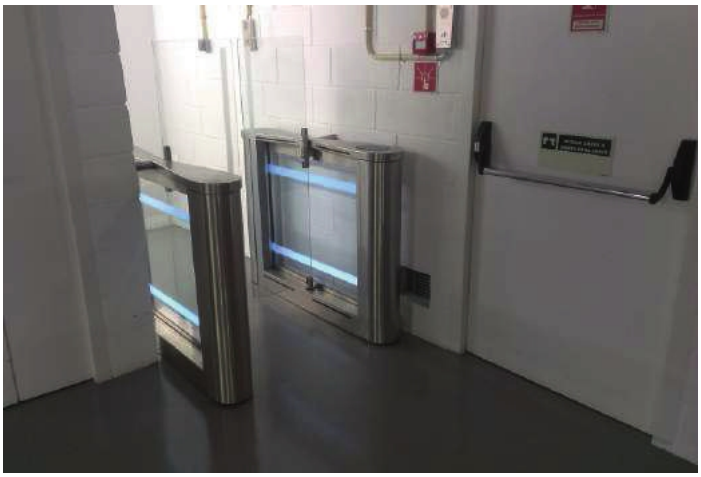

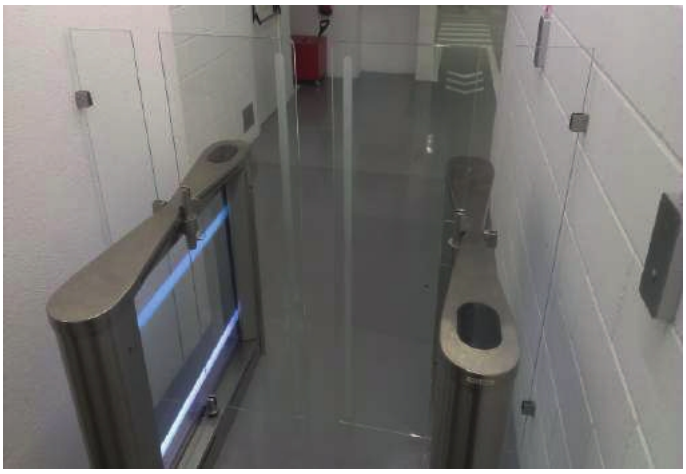

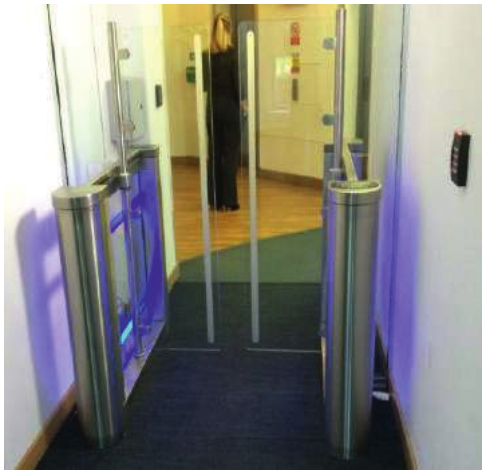

CartPoland
Wólka Mińska ul. Olszowa 5 ,05-300 Mińsk Mazowiecki
office@cartpoland.pl | www.cartpoland.pl
www.bramkiobrotowe.eu | www.bramkiobrotowe.com

CartPoland
Wólka Mińska ul. Olszowa 5 ,05-300 Mińsk Mazowiecki
office@cartpoland.pl | www.cartpoland.pl
www.bramkiobrotowe.eu | www.bramkiobrotowe.com