TRIPOD TURNSTILE
SKULL - M

Skull-M is wall-mounted modification of Bastion turnstile. Skull turnstile has double LED indication, side and top ones. Variety of housing finishing types enables this turnstile to fit different interior solutions at any particular installation site, both indoors and outdoors. Anti panic function (for prevention and elimination of public panic in an emergency case in buildings by providing the fail safe way through the turnstile manually)

ROBUST TRIPOD TURNSTILE WITH STYLISH DESIGN

60 pers/min	25 pers/min	600 mm	IP 41-54*			
FREE ACCESS	CROSSING CAPACITY	PASSAGE WIDTH	PROTECTIVE LEVEL	DROP-ARM	MOTORIZED	BI-DIRECTIONAL

Advantages
- Bi-directional motorized tripod turnstile with drop-arm function
- Successful combination offering high quality at an affordable price
- Can be integrated with any type of access control system
- Low power consumption
- Anti-panic function with automatic return to the starting position
- Whisper quiet, low noise operation
- Turnstile housing can be adapted for both indoor and outdoor installations
- Integrated RFID reader bracket under top glass

Skull Variants
- Bastion Monopod
- Bastion Duopod

Standard
- 2 location LED indicators
- Wired remote control
- Supply of backup battery power connection
- Anti-panic function with automatic reset

Options
- Any additional devices upon request (e.g. passage counter, RFID/Proximity/BioMetric readers, coin acceptor, push button, barcode and QR-code reader)
- Heating function for external installation (for cold climates)
- Electronic module that provides automatic anti-panic function upon power failure

* first figure is standard, all other available upon request.

CartPoland® Polski Producent Kart Plastikowych

CartPoland Maciej Twardowski
Wólka Mińska ul. Olszowa 5, 05 - 300 Mińsk Mazowiecki
(ang.) office@cartpoland , Tel.: +48-795-183-316 | (ros.) inka@cartpoland.pl, Tel.: +48 795 15 83 20
www.bramkiobrotowe.com | www.bramkiobrotowe.eu | www.cartpoland.pl

Technical Specifications:

Width, mm	833
Length, mm	793
Weight, kg (not more)	30
Mechanism	Motorized

Controlled by:

access control system;

manual control

When power goes OFF both directions are free.

Electrical Specifications:

- Voltage:
  - from the AC (100-240)V, 50/60Hz;
  - from a DC source 12 V;
- Maximum power consumption 55W per pass;

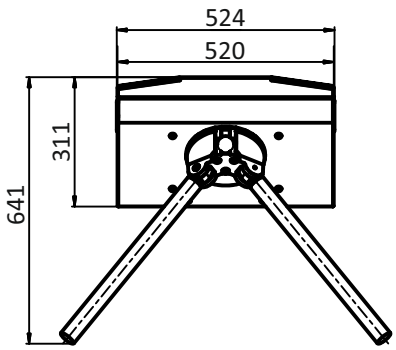

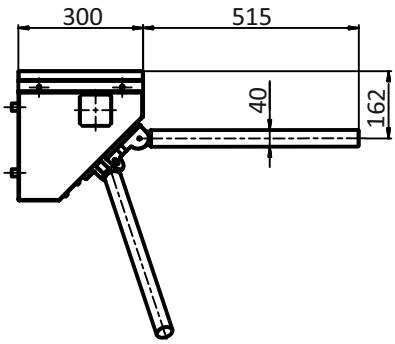

Materials

Standard housing	Standard housing
Available housing	Brushed SS AISI 316 Polished SS AISI 304 Polished SS AISI 316 Powder coated RAL
Tripod hub	Cast aluminum with painted grey finishing

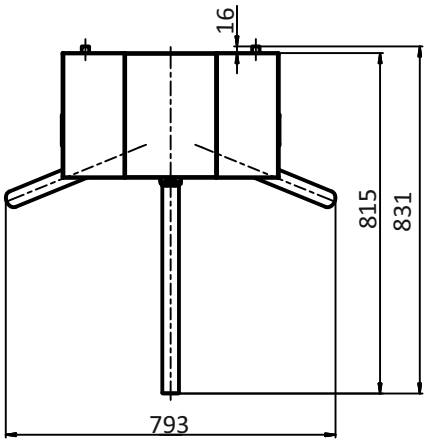

Installation areas:

- Governmental Institutions
- Military Bases
- Nuclear Power Plants
- Production sites (Industrial Plants)
- Commercial areas
- Financial institutions
- Airport Premises
- Business (Office) Centers
- Hotels
- Sport Complexes
- Recreation areas
- Urban areas
- Education Institutions
- others

CartPoland Maciej Twardowski
Wólka Mińska ul. Olszowa 5, 05 - 300 Mińsk Mazowiecki
(ang.) office@cartpoland , Tel.: +48-795-183-316 | (ros.) inka@cartpoland.pl, Tel.: +48 795 15 83 20
www.bramkiobrotowe.com | www.bramkiobrotowe.eu | www.cartpoland.pl